DESCRIPTION

These regulators employ internal current-limiting and thermal-shutdown, making them essentially indestructible. They can deliver up to 100mA output current.

FEATURES

- Maximum Output Current of 100mA (T_C=25°C)
- Internal Short-Circuit Current Limiting
- Internal Thermal Overload Protection
- TO-92, SOT-89, SOT-23 and SOIC Package

PIN CONFIGURATION – Top View

3L SOT23

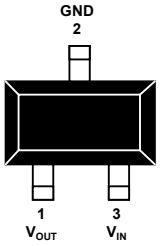

PACKAGE TOP MARKING:
(For 3L SOT-23)

 # BBB

Line 1: # BBB
 # – Device Number
(single letter code)
BBB –Sequential Number

Note:
1. **# is based on Silicon Link Device Marking Guidelines (refer to SLI form no. FM-40217)**
2. **BBB is based on Silicon Link Logbook Code**

SOT-89

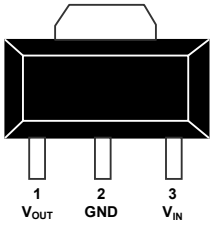

PACKAGE TOP MARKING:
(For SOT-89)

SL78L05
YMXXXS

Line 1: Device
Line 2: Lot No. Code
YMXXX – 5 Character Lot No. mark excluding 1st letter character of lot no.
S – Split Code

TO-92

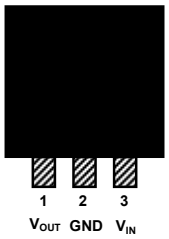

8L SOIC

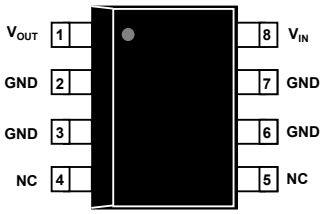

PACKAGE TOP MARKING:
(For both TO-92 & 8L SOIC)

SL78L05
FYMXXXS
GYYWW

Line 1: Device
Line 2: Lot No. Code
F – Foundry Code (G)
YMXXX – 5 Character Lot No.
S – Split Code
Line 3: Date Code
G – Assembly Vendor Code
YY – Year
WW – Workweek

ORDERING INFORMATION

SL78L 05D A LP A

Circuit Type:
Voltage Regulators

Voltage Output:
05 = 5V
06 = 6V
08 = 8V
09 = 9V
12 = 12V

Bandgap Tolerance:
A = ± 2%
B = ± 5 %
C = ± 10%

Packaging Option:
A = Ammo Pack
B = Bulk
T = Tube
7 = Tape and Reel (7" Reel Dia)
13 = Tape and Reel (13" Reel Dia)

Package Style:
LP = TO-92
S = SOT-89
VS = SOT-23/3L
D8 = SOIC/8L

ABSOLUTE MAXIMUM RATINGS

Characteristic	Symbol	Rating		Unit
Input Voltage	V_{IN}	40		V
Power Dissipation	P_D	TO-92	700	mW
		SOT-89	500	mW
		SOT-23	200	mW
		SOIC	750	mW
Operating Temperature	T_{opr}	-40 to 125		°C
Storage Temperature	T_{stg}	-55 to 150		°C
Junction Temperature	T_j	150		°C
Thermal Resistance	$R_{th(j-a)}$	208		°C/W

TYPICAL APPLICATION

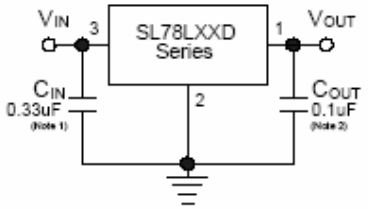

Note 1: C_{IN} is required if regulator is located an appreciable distance from power supply filter.

Note 2: C_{OUT} is not needed for stability; however, it does improve transient response. Values of less than 0.1uF could cause instability.

SCHEMATIC DIAGRAM & EQUIVALENT CIRCUIT

Schematic Diagram

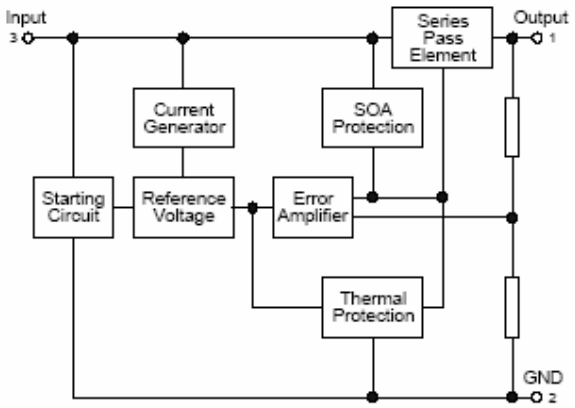

Equivalent Circuit

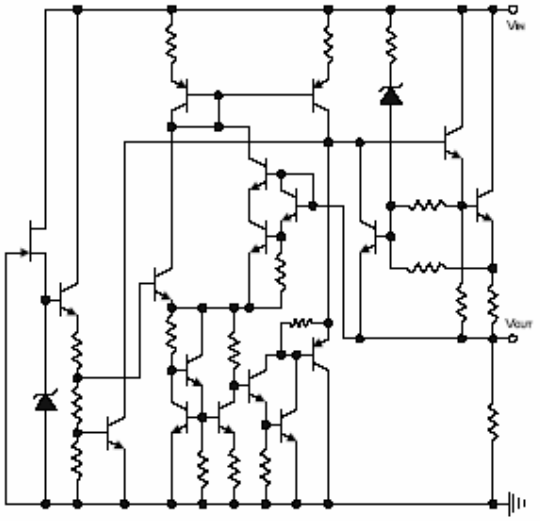

SL78L05DA/B/C ELECTRICAL CHARACTERISTICS

V_{IN}=10V, I_{OUT}=40mA, C_{IN}=0.33uF, C_{OUT}=0.1uF, 0°C≤T_j≤125°C (unless otherwise specified)

Symbol	Parameter	Conditions	SL78L05DA			Units
			Min	Typ	Max	
V_O	Output Voltage	T_j=25°C	4.9	5	5.1	V
		1mA≤I_{OUT}≤70mA	4.9	5	5.1	
		7V≤V_{IN}≤20V, 1mA≤I_{OUT}≤40mA				
Reg_{line}	Line Regulation	T_j=25°C, 7V≤V_{IN}≤20V	-	15	150	mV
		T_j=25°C, 8V≤V_{IN}≤20V	-	15	100	
Reg_{load}	Load Regulation	T_j=25°C, 1mA≤I_{OUT}≤100mA	-	11	60	mV
		T_j=25°C, 1mA≤I_{OUT}≤40mA	-	5	30	
I_B	Quiescent Current	I_{OUT}=5mA, T_j=25°C	-	3.9	6	mA
ΔI_B	Quiescent Current Change	8V≤V_{IN}≤20V, T_j=25°C	-	-	1.5	mA
		1mA≤I_{OUT}≤40mA, T_j=25°C	-	-	0.1	
V_N	Output Noise Voltage	10Hz≤f≤100KHz, T_j=25°C	-	40	-	uVrms
RR	Ripple Rejection	8V≤V_{IN}≤18V, f=120Hz, T_j=25°C	41	49	-	dB
V_D	Dropout Voltage	T_j=25°C, I_{OUT}=100mA	-	1.7	2.5	V
R_O	Output Resistance	f=1KHz	-	17	-	mΩ
I_{SC}	Short Circuit Current	V_{IN}=10V, T_j=25°C	-	1.5	2	A
T_{CVO}	Average Temperature Coefficient of Output Voltage	I_{OUT}=5mA	-	-	0.6	mV/°C

Symbol	Parameter	Conditions	SL78L05DB			Units
			Min	Typ	Max	
V_O	Output Voltage	T_j=25°C	4.75	5	5.25	V
		1mA≤I_{OUT}≤70mA	4.75	5	5.25	
		7V≤V_{IN}≤20V, 1mA≤I_{OUT}≤40mA				
Reg_{line}	Line Regulation	T_j=25°C, 7V≤V_{IN}≤20V	-	15	150	mV
		T_j=25°C, 8V≤V_{IN}≤20V	-	15	100	
Reg_{load}	Load Regulation	T_j=25°C, 1mA≤I_{OUT}≤100mA	-	11	60	mV
		T_j=25°C, 1mA≤I_{OUT}≤40mA	-	5	30	
I_B	Quiescent Current	I_{OUT}=5mA, T_j=25°C	-	3.9	6	mA
ΔI_B	Quiescent Current Change	8V≤V_{IN}≤20V, T_j=25°C	-	-	1.5	mA
		1mA≤I_{OUT}≤40mA, T_j=25°C	-	-	0.1	
V_N	Output Noise Voltage	10Hz≤f≤100KHz, T_j=25°C	-	40	-	uVrms
RR	Ripple Rejection	8V≤V_{IN}≤18V, f=120Hz, T_j=25°C	41	49	-	dB
V_D	Dropout Voltage	T_j=25°C, I_{OUT}=100mA	-	1.7	2.5	V
R_O	Output Resistance	f=1KHz	-	17	-	mΩ
I_{SC}	Short Circuit Current	V_{IN}=10V, T_j=25°C	-	1.5	2	A
T_{CVO}	Average Temperature Coefficient of Output Voltage	I_{OUT}=5mA	-	-	0.6	mV/°C

Symbol	Parameter	Conditions	SL78L05DC			Units
			Min	Typ	Max	
V_O	Output Voltage	T_j=25°C	4.5	5	5.5	V
		1mA≤I_{OUT}≤70mA	4.5	5	5.5	
		7V≤V_{IN}≤20V, 1mA≤I_{OUT}≤40mA				
Reg_{line}	Line Regulation	T_j=25°C, 7V≤V_{IN}≤20V	-	15	150	mV
		T_j=25°C, 8V≤V_{IN}≤20V	-	15	100	
Reg_{load}	Load Regulation	T_j=25°C, 1mA≤I_{OUT}≤100mA	-	11	60	mV
		T_j=25°C, 1mA≤I_{OUT}≤40mA	-	5	30	
I_B	Quiescent Current	I_{OUT}=5mA, T_j=25°C	-	3.9	6	mA
ΔI_B	Quiescent Current Change	8V≤V_{IN}≤20V, T_j=25°C	-	-	1.5	mA
		1mA≤I_{OUT}≤40mA, T_j=25°C	-	-	0.1	
V_N	Output Noise Voltage	10Hz≤f≤100KHz, T_j=25°C	-	40	-	uVrms
RR	Ripple Rejection	8V≤V_{IN}≤18V, f=120Hz, T_j=25°C	41	49	-	dB
V_D	Dropout Voltage	T_j=25°C, I_{OUT}=100mA	-	1.7	2.5	V
R_O	Output Resistance	f=1KHz	-	17	-	mΩ
I_{SC}	Short Circuit Current	V_{IN}=10V, T_j=25°C	-	1.5	2	A
T_{CVO}	Average Temperature Coefficient of Output Voltage	I_{OUT}=5mA	-	-	0.6	mV/°C

SL78L06DA/B/C ELECTRICAL CHARACTERISTICS
V_{IN}=11V, I_{OUT}=40mA, C_{IN}=0.33uF, C_{OUT}=0.1uF, 0°C≤T_j≤125°C (unless otherwise specified)

Symbol	Parameter	Conditions	SL78L06DA			Units
			Min	Typ	Max	
V_O	Output Voltage	T_j=25°C	5.88	6	6.12	V
		1mA≤I_{OUT}≤70mA	5.88	6	6.12	
		8V≤V_{IN}≤22V, 1mA≤I_{OUT}≤40mA				
Reg_{line}	Line Regulation	T_j=25°C, 8V≤V_{IN}≤12V	-	15	155	mV
		T_j=25°C, 9V≤V_{IN}≤12V	-	20	105	
Reg_{load}	Load Regulation	T_j=25°C, 1mA≤I_{OUT}≤100mA	-	15	70	mV
		T_j=25°C, 1mA≤I_{OUT}≤40mA	-	5	35	
I_B	Quiescent Current	I_{OUT}=5mA, T_j=25°C	-	3.9	6	mA
ΔI_B	Quiescent Current Change	9V≤V_{IN}≤22V, T_j=25°C	-	-	1.5	mA
		1mA≤I_{OUT}≤40mA, T_j=25°C	-	-	0.1	
V_N	Output Noise Voltage	10Hz≤f≤100KHz, T_j=25°C	-	50	-	uVrms
RR	Ripple Rejection	9V≤V_{IN}≤19V, f=120Hz, T_j=25°C	39	47	-	dB
V_D	Dropout Voltage	T_j=25°C, I_{OUT}=100mA	-	1.7	2.5	V
R_O	Output Resistance	f=1KHz	-	17	-	mΩ
I_{SC}	Short Circuit Current	V_{IN}=10V, T_j=25°C	-	1.5	2	A
T_{CVO}	Average Temperature Coefficient of Output Voltage	I_{OUT}=5mA	-	-	0.7	mV/°C

Symbol	Parameter	Conditions	SL78L06DB			Units
			Min	Typ	Max	
V_O	Output Voltage	T_j=25°C	5.7	6	6.3	V
		1mA≤I_{OUT}≤70mA	5.7	6	6.3	
		8V≤V_{IN}≤22V, 1mA≤I_{OUT}≤40mA				
Reg_{line}	Line Regulation	T_j=25°C, 8V≤V_{IN}≤22V	-	15	155	mV
		T_j=25°C, 9V≤V_{IN}≤12V	-	20	105	
Reg_{load}	Load Regulation	T_j=25°C, 1mA≤I_{OUT}≤100mA	-	15	70	mV
		T_j=25°C, 1mA≤I_{OUT}≤40mA	-	5	35	
I_B	Quiescent Current	I_{OUT}=5mA, T_j=25°C	-	3.9	6	mA
ΔI_B	Quiescent Current Change	9V≤V_{IN}≤22V, T_j=25°C	-	-	1.5	mA
		1mA≤I_{OUT}≤40mA, T_j=25°C	-	-	0.1	
V_N	Output Noise Voltage	10Hz≤f≤100KHz, T_j=25°C	-	50	-	uVrms
RR	Ripple Rejection	9V≤V_{IN}≤19V, f=120Hz, T_j=25°C	39	47	-	dB
V_D	Dropout Voltage	T_j=25°C, I_{OUT}=100mA	-	1.7	2.5	V
R_O	Output Resistance	f=1KHz	-	17	-	mΩ
I_{SC}	Short Circuit Current	V_{IN}=10V, T_j=25°C	-	1.5	2	A
T_{CVO}	Average Temperature Coefficient of Output Voltage	I_{OUT}=5mA	-	-	0.7	mV/°C

Symbol	Parameter	Conditions	SL78L06DC			Units
			Min	Typ	Max	
V_O	Output Voltage	T_j=25°C	5.4	6	6.6	V
		1mA≤I_{OUT}≤70mA	5.4	6	6.6	
		8V≤V_{IN}≤22V, 1mA≤I_{OUT}≤40mA				
Reg_{line}	Line Regulation	T_j=25°C, 8V≤V_{IN}≤22V	-	15	155	mV
		T_j=25°C, 9V≤V_{IN}≤12V	-	20	105	
Reg_{load}	Load Regulation	T_j=25°C, 1mA≤I_{OUT}≤100mA	-	15	70	mV
		T_j=25°C, 1mA≤I_{OUT}≤40mA	-	5	35	
I_B	Quiescent Current	I_{OUT}=5mA, T_j=25°C	-	3.9	6	mA
ΔI_B	Quiescent Current Change	9V≤V_{IN}≤22V, T_j=25°C	-	-	1.5	mA
		1mA≤I_{OUT}≤40mA, T_j=25°C	-	-	0.1	
V_N	Output Noise Voltage	10Hz≤f≤100KHz, T_j=25°C	-	50	-	uVrms
RR	Ripple Rejection	9V≤V_{IN}≤19V, f=120Hz, T_j=25°C	39	47	-	dB
V_D	Dropout Voltage	T_j=25°C, I_{OUT}=100mA	-	1.7	2.5	V
R_O	Output Resistance	f=1KHz	-	17	-	mΩ
I_{SC}	Short Circuit Current	V_{IN}=10V, T_j=25°C	-	1.5	2	A
T_{CVO}	Average Temperature Coefficient of Output Voltage	I_{OUT}=5mA	-	-	0.7	mV/°C

SL78L08DA/B/C ELECTRICAL CHARACTERISTICS

V_{IN}=14V, I_{OUT}=40mA, C_{IN}=0.33uF, C_{OUT}=0.1uF, 0°C≤T_j≤125°C (unless otherwise specified)

Symbol	Parameter	Conditions	SL78L08DA			Units
			Min	Typ	Max	
V_O	Output Voltage	T_j=25°C	7.84	8	8.16	V
		1mA≤I_{OUT}≤70mA	7.84	8	8.16	
		10.5V≤V_{IN}≤23V, 1mA≤I_{OUT}≤40mA				
Reg_{line}	Line Regulation	T_j=25°C, 10.5V≤V_{IN}≤23V	-	20	175	mV
		T_j=25°C, 11V≤V_{IN}≤23V	-	20	125	
Reg_{load}	Load Regulation	T_j=25°C, 1mA≤I_{OUT}≤100mA	-	15	80	mV
		T_j=25°C, 1mA≤I_{OUT}≤40mA	-	7	40	
I_B	Quiescent Current	I_{OUT}=5mA, T_j=25°C	-	3.9	6	mA
ΔI_B	Quiescent Current Change	11V≤V_{IN}≤23V, T_j=25°C	-	-	1.5	mA
		1mA≤I_{OUT}≤40mA, T_j=25°C	-	-	0.1	
V_N	Output Noise Voltage	10Hz≤f≤100KHz, T_j=25°C	-	60	-	uVrms
RR	Ripple Rejection	12V≤V_{IN}≤23V, f=120Hz, T_j=25°C	37	45	-	dB
V_D	Dropout Voltage	T_j=25°C, I_{OUT}=100mA	-	1.7	2.5	V
R_O	Output Resistance	f=1KHz	-	17	-	mΩ
I_{SC}	Short Circuit Current	T_j=25°C	-	1.5	2	A
T_{CVO}	Average Temperature Coefficient of Output Voltage	I_{OUT}=5mA	-	-	0.9	mV/°C

Symbol	Parameter	Conditions	SL78L08DB			Units
			Min	Typ	Max	
V_O	Output Voltage	T_j=25°C	7.6	8	8.4	V
		1mA≤I_{OUT}≤70mA	7.6	8	8.4	
		10.5V≤V_{IN}≤23V, 1mA≤I_{OUT}≤40mA				
Reg_{line}	Line Regulation	T_j=25°C, 10.5V≤V_{IN}≤23V	-	20	175	mV
		T_j=25°C, 11V≤V_{IN}≤23V	-	20	125	
Reg_{load}	Load Regulation	T_j=25°C, 1mA≤I_{OUT}≤100mA	-	15	80	mV
		T_j=25°C, 1mA≤I_{OUT}≤40mA	-	7	40	
I_B	Quiescent Current	I_{OUT}=5mA, T_j=25°C	-	3.9	6	mA
ΔI_B	Quiescent Current Change	11V≤V_{IN}≤23V, T_j=25°C	-	-	1.5	mA
		1mA≤I_{OUT}≤40mA, T_j=25°C	-	-	0.1	
V_N	Output Noise Voltage	10Hz≤f≤100KHz, T_j=25°C	-	60	-	uVrms
RR	Ripple Rejection	12V≤V_{IN}≤23V, f=120Hz, T_j=25°C	37	45	-	dB
V_D	Dropout Voltage	T_j=25°C, I_{OUT}=100mA	-	1.7	2.5	V
R_O	Output Resistance	f=1KHz	-	17	-	mΩ
I_{SC}	Short Circuit Current	T_j=25°C	-	1.5	2	A
T_{CVO}	Average Temperature Coefficient of Output Voltage	I_{OUT}=5mA	-	-	0.9	mV/°C

Symbol	Parameter	Conditions	SL78L08DC			Units
			Min	Typ	Max	
V_O	Output Voltage	T_j=25°C	7.2	8	8.8	V
		1mA≤I_{OUT}≤70mA	7.2	8	8.8	
		10.5V≤V_{IN}≤23V, 1mA≤I_{OUT}≤40mA				
Reg_{line}	Line Regulation	T_j=25°C, 10.5V≤V_{IN}≤23V	-	20	175	mV
		T_j=25°C, 11V≤V_{IN}≤23V	-	20	125	
Reg_{load}	Load Regulation	T_j=25°C, 1mA≤I_{OUT}≤100mA	-	15	80	mV
		T_j=25°C, 1mA≤I_{OUT}≤40mA	-	7	40	
I_B	Quiescent Current	I_{OUT}=5mA, T_j=25°C	-	3.9	6	mA
ΔI_B	Quiescent Current Change	11V≤V_{IN}≤23V, T_j=25°C	-	-	1.5	mA
		1mA≤I_{OUT}≤40mA, T_j=25°C	-	-	0.1	
V_N	Output Noise Voltage	10Hz≤f≤100KHz, T_j=25°C	-	60	-	uVrms
RR	Ripple Rejection	12V≤V_{IN}≤23V, f=120Hz, T_j=25°C	37	45	-	dB
V_D	Dropout Voltage	T_j=25°C, I_{OUT}=100mA	-	1.7	2.5	V
R_O	Output Resistance	f=1KHz	-	17	-	mΩ
I_{SC}	Short Circuit Current	T_j=25°C	-	1.5	2	A
T_{CVO}	Average Temperature Coefficient of Output Voltage	I_{OUT}=5mA	-	-	0.9	mV/°C

SL78L09DA/B/C ELECTRICAL CHARACTERISTICS
V_{IN}=15V, I_{OUT}=40mA, C_{IN}=0.33uF, C_{OUT}=0.1uF, 0°C≤T_j≤125°C (unless otherwise specified)

Symbol	Parameter	Conditions	SL78L09DA			Units
			Min	Typ	Max	
V_O	Output Voltage	T_j=25°C	8.82	9	9.18	V
		1mA≤I_{OUT}≤70mA	8.82	9	9.18	
		11.4V≤V_{IN}≤24V, 1mA≤I_{OUT}≤40mA				
Reg_{line}	Line Regulation	T_j=25°C, 11.4V≤V_{IN}≤24V	-	80	200	mV
		T_j=25°C, 12V≤V_{IN}≤24V	-	20	160	
Reg_{load}	Load Regulation	T_j=25°C, 1mA≤I_{OUT}≤100mA	-	17	90	mV
		T_j=25°C, 1mA≤I_{OUT}≤40mA	-	8	45	
I_B	Quiescent Current	I_{OUT}=5mA, T_j=25°C	-	3.9	6	mA
ΔI_B	Quiescent Current Change	12V≤V_{IN}≤24V, T_j=25°C	-	-	1.5	mA
		1mA≤I_{OUT}≤40mA, T_j=25°C	-	-	0.1	
V_N	Output Noise Voltage	10Hz≤f≤100KHz, T_j=25°C	-	65	-	uVrms
RR	Ripple Rejection	12V≤V_{IN}≤24V, f=120Hz, T_j=25°C	36	44	-	dB
V_D	Dropout Voltage	T_j=25°C, I_{OUT}=100mA	-	1.7	2.5	V
R_O	Output Resistance	f=1KHz	-	17	-	mΩ
I_{SC}	Short Circuit Current	T_j=25°C	-	1.5	2	A
T_{CVO}	Average Temperature Coefficient of Output Voltage	I_{OUT}=5mA	-	-	1	mV/°C

Symbol	Parameter	Conditions	SL78L09DB			Units
			Min	Typ	Max	
V_O	Output Voltage	T_j=25°C	8.55	9	9.45	V
		1mA≤I_{OUT}≤70mA	8.55	9	9.45	
		11.4V≤V_{IN}≤24V, 1mA≤I_{OUT}≤40mA				
Reg_{line}	Line Regulation	T_j=25°C, 11.4V≤V_{IN}≤24V	-	80	200	mV
		T_j=25°C, 12V≤V_{IN}≤24V	-	20	160	
Reg_{load}	Load Regulation	T_j=25°C, 1mA≤I_{OUT}≤100mA	-	17	90	mV
		T_j=25°C, 1mA≤I_{OUT}≤40mA	-	8	45	
I_B	Quiescent Current	I_{OUT}=5mA, T_j=25°C	-	3.9	6	mA
ΔI_B	Quiescent Current Change	12V≤V_{IN}≤24V, T_j=25°C	-	-	1.5	mA
		1mA≤I_{OUT}≤40mA, T_j=25°C	-	-	0.1	
V_N	Output Noise Voltage	10Hz≤f≤100KHz, T_j=25°C	-	65	-	uVrms
RR	Ripple Rejection	12V≤V_{IN}≤24V, f=120Hz, T_j=25°C	36	44	-	dB
V_D	Dropout Voltage	T_j=25°C, I_{OUT}=100mA	-	1.7	2.5	V
R_O	Output Resistance	f=1KHz	-	17	-	mΩ
I_{SC}	Short Circuit Current	T_j=25°C	-	1.5	2	A
T_{CVO}	Average Temperature Coefficient of Output Voltage	I_{OUT}=5mA	-	-	1	mV/°C

Symbol	Parameter	Conditions	SL78L09DC			Units
			Min	Typ	Max	
V_O	Output Voltage	T_j=25°C	8.1	9	9.9	V
		1mA≤I_{OUT}≤70mA	8.1	9	9.9	
		11.4V≤V_{IN}≤24V, 1mA≤I_{OUT}≤40mA				
Reg_{line}	Line Regulation	T_j=25°C, 11.4V≤V_{IN}≤24V	-	80	200	mV
		T_j=25°C, 12V≤V_{IN}≤24V	-	20	160	
Reg_{load}	Load Regulation	T_j=25°C, 1mA≤I_{OUT}≤100mA	-	17	90	mV
		T_j=25°C, 1mA≤I_{OUT}≤40mA	-	8	45	
I_B	Quiescent Current	I_{OUT}=5mA, T_j=25°C	-	3.9	6	mA
ΔI_B	Quiescent Current Change	12V≤V_{IN}≤24V, T_j=25°C	-	-	1.5	mA
		1mA≤I_{OUT}≤40mA, T_j=25°C	-	-	0.1	
V_N	Output Noise Voltage	10Hz≤f≤100KHz, T_j=25°C	-	65	-	uVrms
RR	Ripple Rejection	12V≤V_{IN}≤24V, f=120Hz, T_j=25°C	36	44	-	dB
V_D	Dropout Voltage	T_j=25°C, I_{OUT}=100mA	-	1.7	2.5	V
R_O	Output Resistance	f=1KHz	-	17	-	mΩ
I_{SC}	Short Circuit Current	T_j=25°C	-	1.5	2	A
T_{CVO}	Average Temperature Coefficient of Output Voltage	I_{OUT}=5mA	-	-	1	mV/°C

SL78L12DA/B/C ELECTRICAL CHARACTERISTICS

V_{IN}=19V, I_{OUT}=40mA, C_{IN}=0.33uF, C_{OUT}=0.1uF, 0°C≤T_j≤125°C (unless otherwise specified)

Symbol	Parameter	Conditions	SL78L12DA			Units
			Min	Typ	Max	
V_O	Output Voltage	T_j=25°C	11.76	12	12.24	V
		1mA≤I_{OUT}≤70mA	11.76	12	12.24	
		14.5V≤V_{IN}≤27V, 1mA≤I_{OUT}≤40mA				
Reg_{line}	Line Regulation	T_j=25°C, 14.5V≤V_{IN}≤27V	-	120	250	mV
		T_j=25°C, 16V≤V_{IN}≤27V	-	100	200	
Reg_{load}	Load Regulation	T_j=25°C, 1mA≤I_{OUT}≤100mA	-	20	100	mV
		T_j=25°C, 1mA≤I_{OUT}≤40mA	-	10	50	
I_B	Quiescent Current	I_{OUT}=5mA, T_j=25°C	-	3.9	6	mA
ΔI_B	Quiescent Current Change	16V≤V_{IN}≤27V, T_j=25°C	-	-	1.5	mA
		1mA≤I_{OUT}≤40mA, T_j=25°C	-	-	0.1	
V_N	Output Noise Voltage	10Hz≤f≤100KHz, T_j=25°C	-	80	-	uVrms
RR	Ripple Rejection	15V≤V_{IN}≤25V, f=120Hz, T_j=25°C	36	41	-	dB
V_D	Dropout Voltage	T_j=25°C, I_{OUT}=100mA	-	1.7	2.5	V
R_O	Output Resistance	f=1KHz	-	17	-	mΩ
I_{SC}	Short Circuit Current	T_j=25°C	-	1.5	2	A
T_{CVO}	Average Temperature Coefficient of Output Voltage	I_{OUT}=5mA	-	-	1.4	mV/°C

Symbol	Parameter	Conditions	SL78L12DB			Units
			Min	Typ	Max	
V_O	Output Voltage	T_j=25°C	11.4	12	12.6	V
		1mA≤I_{OUT}≤70mA	11.4	12	12.6	
		14.5V≤V_{IN}≤27V, 1mA≤I_{OUT}≤40mA				
Reg_{line}	Line Regulation	T_j=25°C, 14.5V≤V_{IN}≤27V	-	120	250	mV
		T_j=25°C, 16V≤V_{IN}≤27V	-	100	200	
Reg_{load}	Load Regulation	T_j=25°C, 1mA≤I_{OUT}≤100mA	-	20	100	mV
		T_j=25°C, 1mA≤I_{OUT}≤40mA	-	10	50	
I_B	Quiescent Current	I_{OUT}=5mA, T_j=25°C	-	3.9	6	mA
ΔI_B	Quiescent Current Change	16V≤V_{IN}≤27V, T_j=25°C	-	-	1.5	mA
		1mA≤I_{OUT}≤40mA, T_j=25°C	-	-	0.1	
V_N	Output Noise Voltage	10Hz≤f≤100KHz, T_j=25°C	-	80	-	uVrms
RR	Ripple Rejection	15V≤V_{IN}≤25V, f=120Hz, T_j=25°C	36	41	-	dB
V_D	Dropout Voltage	T_j=25°C, I_{OUT}=100mA	-	1.7	2.5	V
R_O	Output Resistance	f=1KHz	-	17	-	mΩ
I_{SC}	Short Circuit Current	T_j=25°C	-	1.5	2	A
T_{CVO}	Average Temperature Coefficient of Output Voltage	I_{OUT}=5mA	-	-	1.4	mV/°C

Symbol	Parameter	Conditions	SL78L12DC			Units
			Min	Typ	Max	
V_O	Output Voltage	T_j=25°C	10.8	12	13.2	V
		1mA≤I_{OUT}≤70mA	10.8	12	13.2	
		14.5V≤V_{IN}≤27V, 1mA≤I_{OUT}≤40mA				
Reg_{line}	Line Regulation	T_j=25°C, 14.5V≤V_{IN}≤27V	-	120	250	mV
		T_j=25°C, 16V≤V_{IN}≤27V	-	100	200	
Reg_{load}	Load Regulation	T_j=25°C, 1mA≤I_{OUT}≤100mA	-	20	100	mV
		T_j=25°C, 1mA≤I_{OUT}≤40mA	-	10	50	
I_B	Quiescent Current	I_{OUT}=5mA, T_j=25°C	-	3.9	6	mA
ΔI_B	Quiescent Current Change	16V≤V_{IN}≤27V, T_j=25°C	-	-	1.5	mA
		1mA≤I_{OUT}≤40mA, T_j=25°C	-	-	0.1	
V_N	Output Noise Voltage	10Hz≤f≤100KHz, T_j=25°C	-	80	-	uVrms
RR	Ripple Rejection	15V≤V_{IN}≤25V, f=120Hz, T_j=25°C	36	41	-	dB
V_D	Dropout Voltage	T_j=25°C, I_{OUT}=100mA	-	1.7	2.5	V
R_O	Output Resistance	f=1KHz	-	17	-	mΩ
I_{SC}	Short Circuit Current	T_j=25°C	-	1.5	2	A
T_{CVO}	Average Temperature Coefficient of Output Voltage	I_{OUT}=5mA	-	-	1.4	mV/°C

TEST CIRCUITS

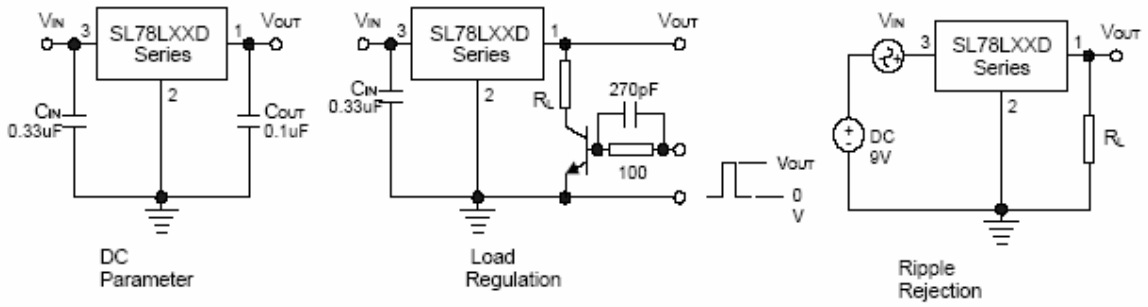

APPLICATION CIRCUITS

Constant Current Regulator

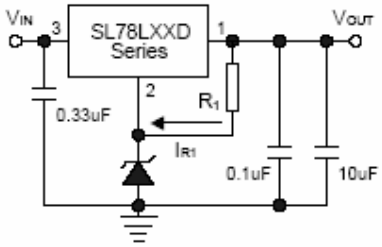

$V_{OUT}=V_{OUT(IC)}+V_Z$
$I_1=V_{OUT(IC)}/R_1$

Circuit for Increasing Output Voltage

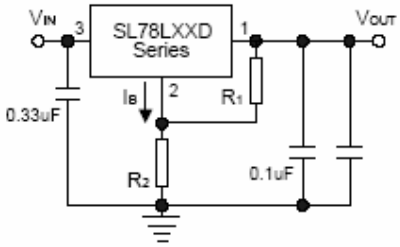

$V_{OUT}=V_{OUT(IC)}(1+R_2/R_1)+R_2*I_B$

Adjustable Output Regulator

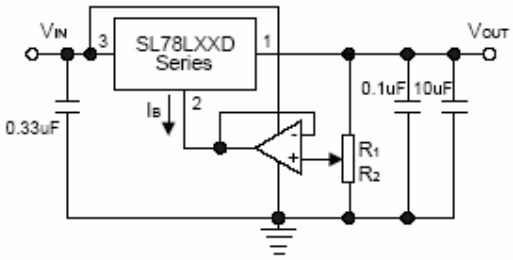

$V_{OUT}=V_{OUT(IC)}(1+R_2/R_1)$

High Output Current with Short-circuit Protection

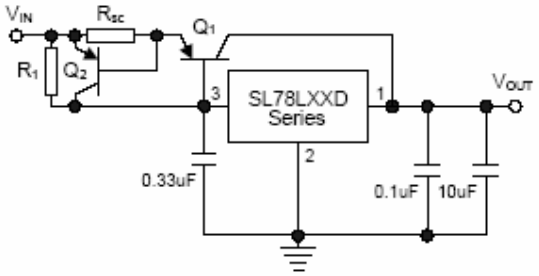

$R_1 \leq V_{BE1}/I_{B(max)}$
$R_{SC}=V_{BE2}/I_{SC}$, I_{SC}: Short-Circuit Current

CHARACTERISTICS CURVES

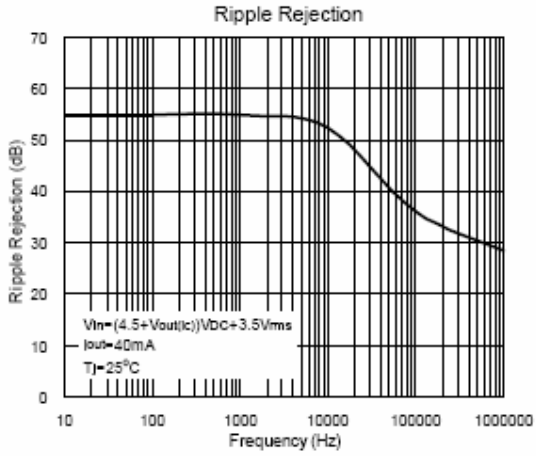

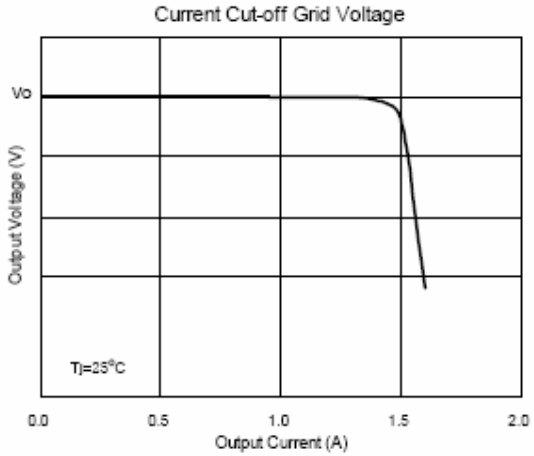

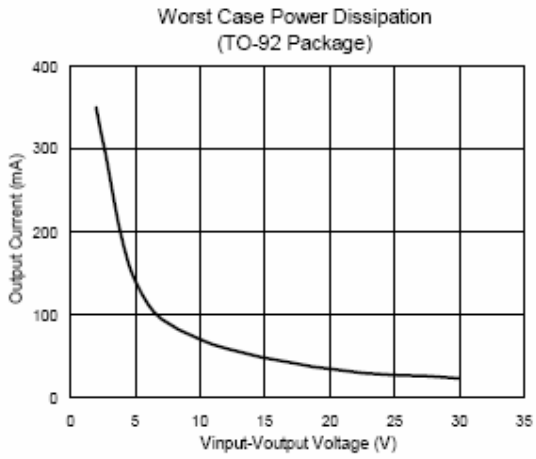

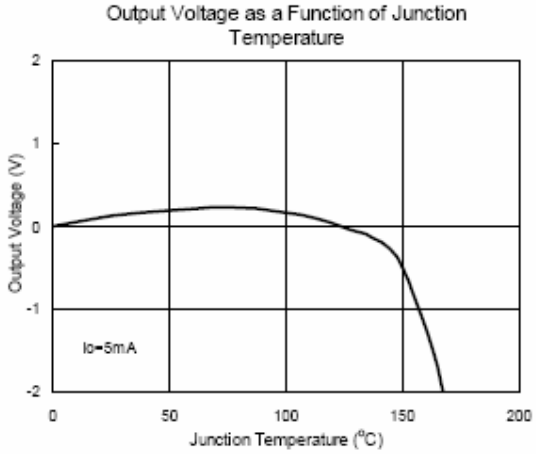

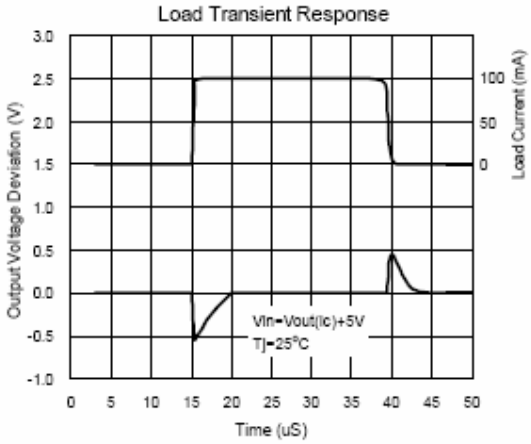

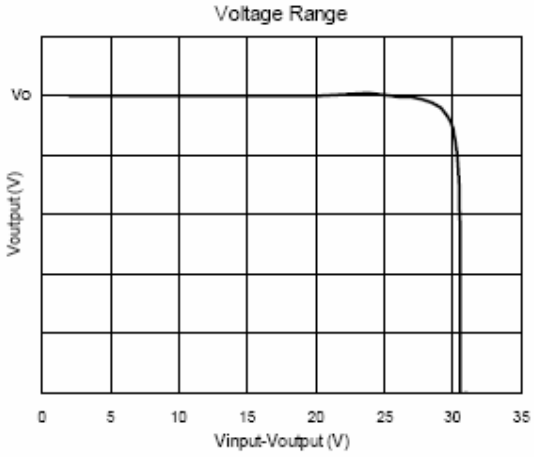

TO-92 PACKAGE DIMENSION

3-Lead TO-92 Plastic Package
SLI Package Code: LP

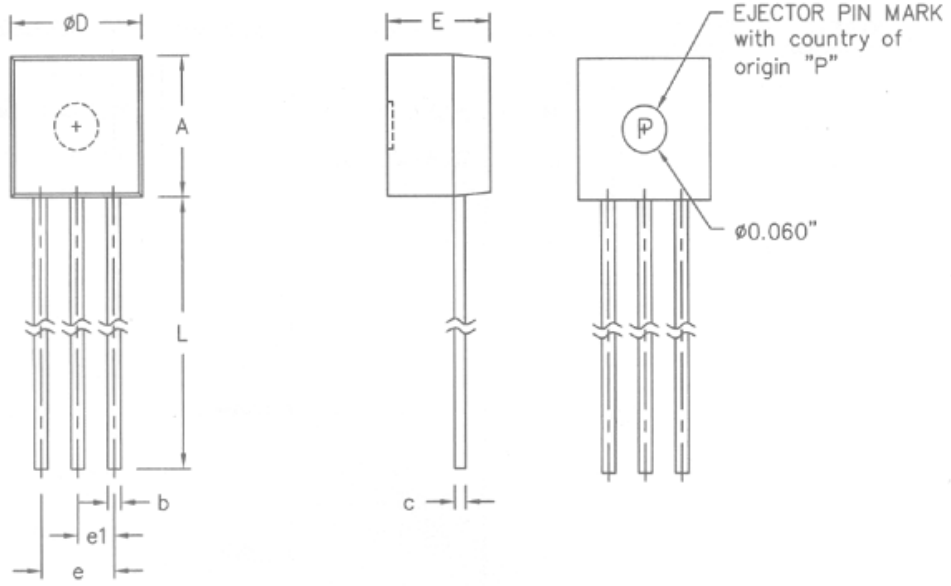

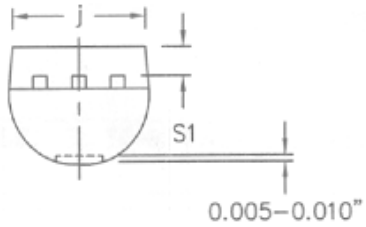

SYMBOL	INCHES		
	MIN	NOM	MAX
A	0.176	0.180	0.184
b	0.015	0.018	0.022
c	0.014	0.015	0.020
øD	0.176	0.180	0.184
e	0.098	0.100	0.102
e1	0.048	0.050	0.052
E	0.136	0.140	0.144
j	0.166	0.170	0.174
L	0.530	0.550	0.570
S1	0.031	0.035	0.039

NOTES:
1. ALL DIMENSIONS IN INCHES.
2. A MECHANICAL TOLERANCE OF ±0.002" APPLIES TO ALL DIMENSIONS WHERE NO TOLERANCE IS EXPLICITLY GIVEN.
3. BASED FROM JEDEC T0-226 VARIATION AA OUTLINE.

SOT-89 PACKAGE DIMENSION

3-Lead SOT-89 Plastic
Surface Mounted Package
SLI Package Code: S

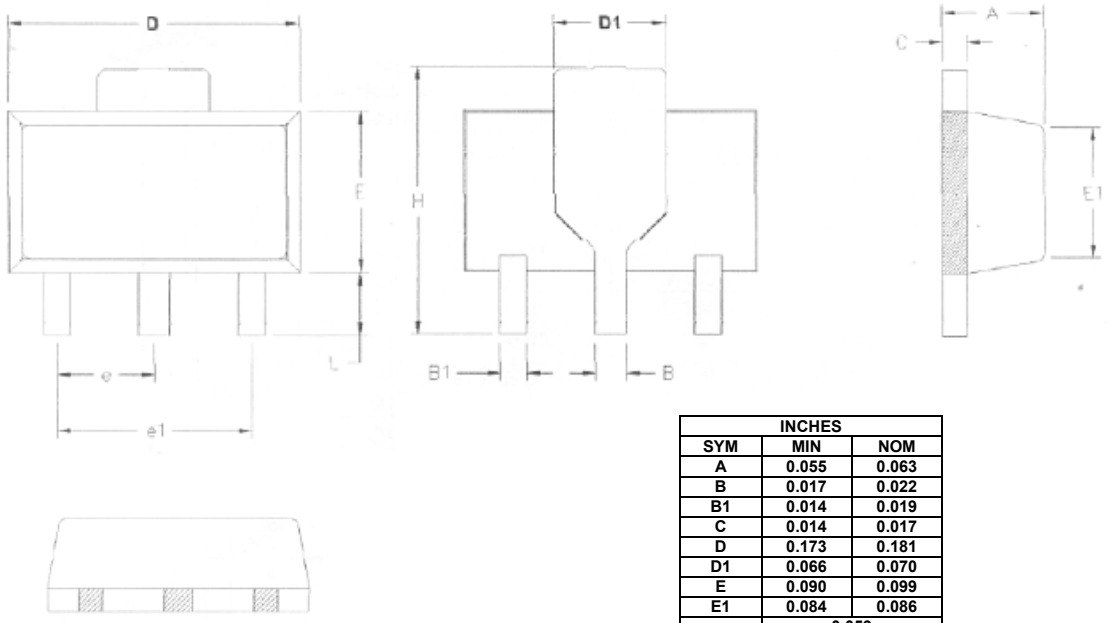

INCHES		
SYM	MIN	NOM
A	0.055	0.063
B	0.017	0.022
B1	0.014	0.019
C	0.014	0.017
D	0.173	0.181
D1	0.066	0.070
E	0.090	0.099
E1	0.084	0.086
e	0.059	
e1	0.118	
H	0.155	0.167
L	0.029	0.041

NOTES:
1. TOP PACKAGE ANGLE IS 9° +1°/-2° TOLERANCE. BOTTOM PACKAGE ANGLE IS 3° MAX.
2. PACKAGE CORNER RADIUS IS 5 MILS MAX ON ALL CORNERS.
3. SHINNY PACKAGE FINISH ON ALL SIDES EXCEPT TOP SIDE FINISH IS MINIMUM MATTE OF 10-14VDI.

NOTE: ALL DIMENSION ARE IN INCHES

3L-SOT23 PACKAGE DIMENSION

3-Lead SOT-23Plastic
Surface Mounted Package
SLI Package Code: VS

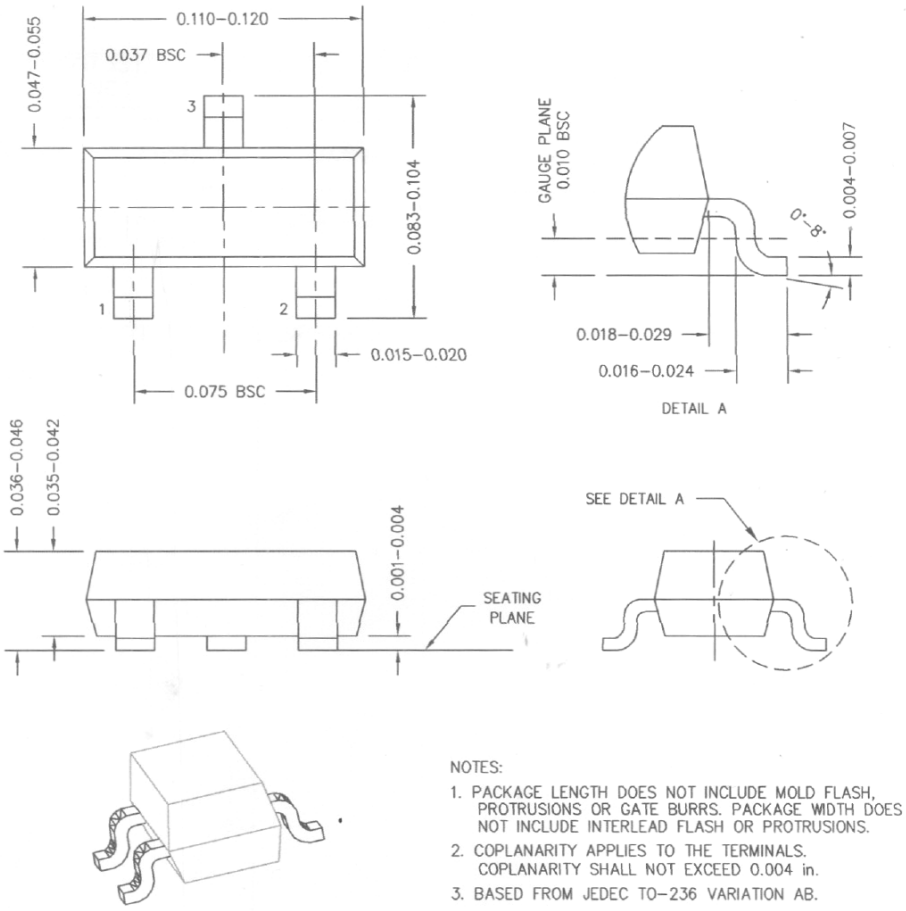

NOTES:
1. PACKAGE LENGTH DOES NOT INCLUDE MOLD FLASH, PROTRUSIONS OR GATE BURRS. PACKAGE WIDTH DOES NOT INCLUDE INTERLEAD FLASH OR PROTRUSIONS.
2. COPLANARITY APPLIES TO THE TERMINALS. COPLANARITY SHALL NOT EXCEED 0.004 in.
3. BASED FROM JEDEC TO–236 VARIATION AB.

8L-SOIC PACKAGE DIMENSION

8-Lead SOIC Plastic
Surface Mounted Package
SLI Package Code: D8

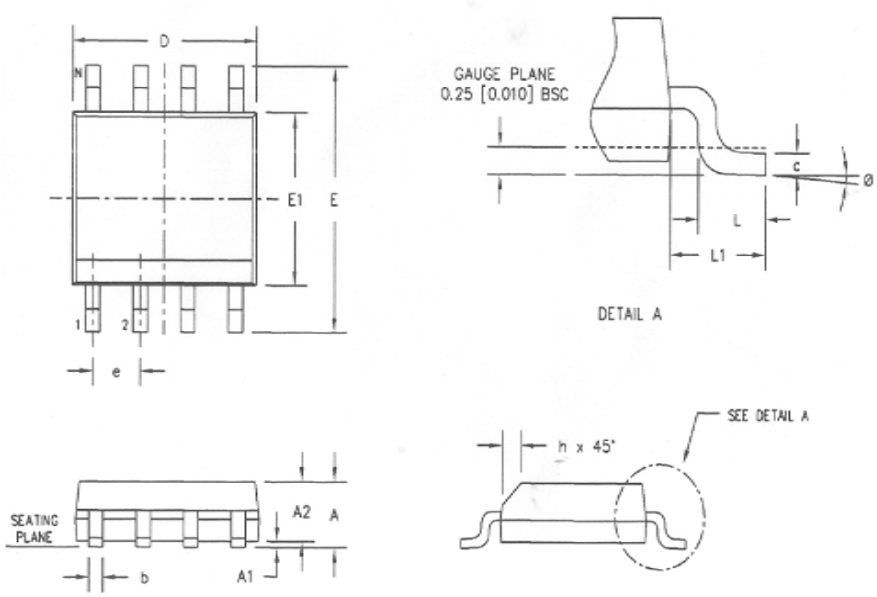

	DIMENSION IN INCHES			DIMENSION IN MM		
SYM	MIN	NOM	MAX	MIN	NOM	MAX
A	0.059	0.062	0.065	1.50	1.57	1.65
A1	0.004	0.008	0.010	0.10	0.20	0.25
A2	0.051	0.054	0.057	1.30	1.37	1.45
b	0.013	0.016	0.020	0.33	0.41	0.51
c	0.007	0.008	0.010	0.18	0.20	0.25
D	0.191	0.193	0.195	4.85	4.90	4.95
E1	0.151	0.153	0.155	3.84	3.89	3.94
E	0.228	0.234	0.240	5.79	5.94	6.10
e		0.050			1.27	
L	0.020	0.024	0.032	0.51	0.61	0.81
L1	0.039	0.041	0.043	0.99	1.04	1.09
Ø	0*	-	B*	0*	-	B*
h	0.011	0.015	0.019	0.28	0.38	0.48

NOTES:
1. DIMENSION D DOES NOT INCLUDE MOLD FLASH, PROTRUSIONS OR GATE BURRS. DIMENSION E1 DOES NOT INCLUDE INTERLEAD FLASH OR PROTRUSIONS.
2. COPLANARITY APPLIES TO THE TERMINALS. COPLANARITY SHALL NOT EXCEED 0.003" [0.08 mm].
3. BASED FROM JEDEC NS-012 VARIATION AA.

TO-92 AMMO PACK SPECIFICATIONS

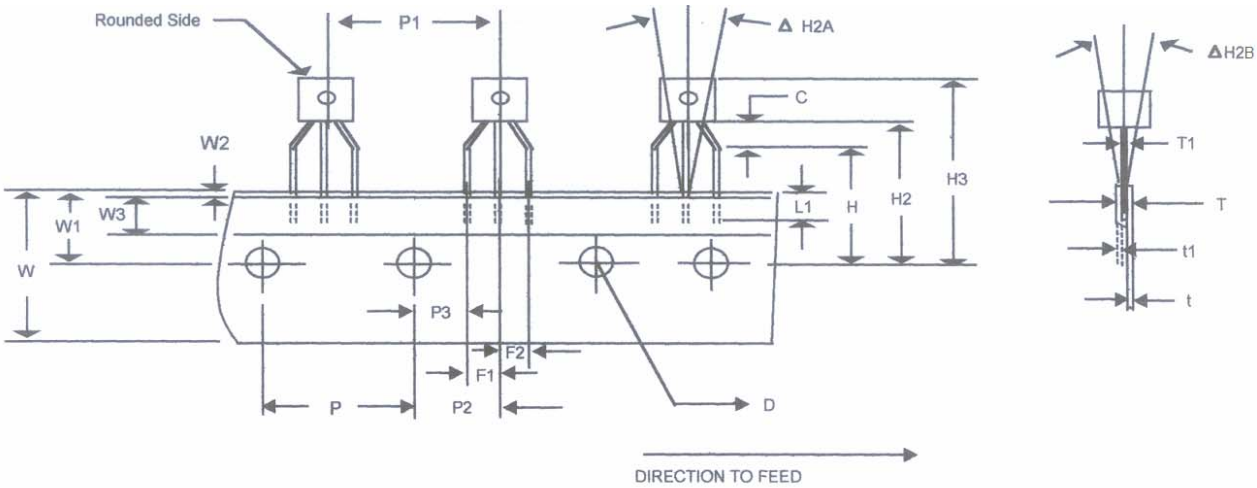

SYMBOL	DESCRIPTION	NOMINAL VALUE		TOLERANCES			
				min		max	
		mm	inch	mm	inch	mm	inch
D	Feed Hole Diameter	4.0	0.157	3.8	0.150	4.2	0.165
T1 (POD)	Component Lead Thickness	0.405	0.016	0.36	0.014	0.45	0.018
F1/F2	Lead Pitch (Left / Right)	2.54	0.100	2.4	0.094	2.8	0.110
C	Bottom of Component to Seating Plane	2.50	0.098	1.50	0.059	4.00	0.157
W1	Edge to Sprocket Hole Center	9.0	0.354	8.50	0.335	9.50	0.374
H2A	Deflection (Left or Right)	0.50	0.020	0	0	0.50	0.020
H2B	Deflection (Front or Rear)	1.0	0.039	0	0	1.0	0.039
H2 (H + C)	Feed Hole to Bottom of Component	18.5	0.728	17.00	0.669	20.50	0.087
H	Height of Seating Plane	16	0.630	15.5	0.610	16.5	0.650
H3	Feed Hole Center to Overall Transistor Height	27.75	1.092	23.5	0.925	32.0	1.260
L	Defective Unit Clipped Dimension	-	-	-	-	11.0	0.433
L1	Leadwire Enclosure	2.50	0.098	2.50	0.098	-	-
P	Feed Hole Pitch	12.7	0.500	12.40	0.488	13.0	0.512
P2	Center of Feed Hole to Center Lead	6.35	0.250	6.0	0.234	6.75	0.266
P3 (P2-F1)	First Lead Spacing Dimension	3.75	0.148	3.6	0.142	3.95	0.156
P1	Center Lead to Center Lead	12.7	0.500	12.2	0.500	13.2	0.520
t1	Adhesive Tape Thickness	0.18	0.007	0.16	0.006	0.20	0.008
T (t+t1+T1)	Overall Taped Package Thickness	-	-	-	-	1.55	0.061
T	Carrier Strip Thickness	0.37	0.015	0.27	0.011	0.47	0.018
W	Carrier Strip Width (18mm)	18.00	0.709	17.5	0.689	19.0	0.748
W3	Adhesive Tape Width (6mm)	6.00	0.236	5.5	0.217	6.3	0.248
W2	Adhesive Tape Position	0.25	0.010	0	0	0.50	0.020

TO-92 Ammo Pack Requirement		
Components	Tape Width (W) mm	Fan Fold Box
TO92 3L	18	2000

PACKAGE MECHANICAL DRAWING

Surface Mountable Tape & Reel Specifications in mm (inch)
(SOIC, SOT-23 and SOT-89)

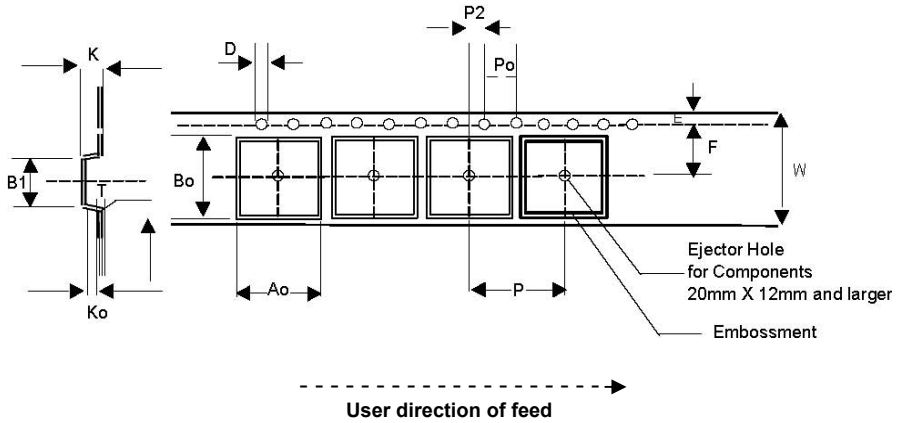

Tape Size (W)	D	E	P0	T (Max)	A0, B0, K0	T1 (Max)	Constant Dimensions
8, 12, 16, 24mm	1.55±0.05 (.061±.002)	1.75±0.10 (.069±.004)	4.0±0.10 (.157±.004)	0.400 (.016)	See Note	0.100 (.004)	

Tape Size (W)	B1 Max.	D1 Min.	F	K Max.	P2	
8 mm	4.2 (.165)	1.0 (.039)	3.5±0.05 (.138±.002)	2.4 (.094)	2.0±.05	
12 mm	8.2 (.323)	1.5 (.059)	5.5±0.05 (.217±.002)	4.5 (.177)	.079±.002	Variable Dimensions

Per Package Requirement					
Components		Tape Width (W) mm	Cavity Pitch (P) mm	Devices per Reel	
				7” Reel	13” Reel
SOIC	8L	12	8	-	2500
SOT-23	3L	8	4	3000	-
SOT-89	3L	12	8	-	2500

Note: Ao Bo Ko are determined by component size. The clearance between the component and the cavity must be within 0.05 [.002] min. to 0.50 [.020] max. for 8mm tape, 0.05 [.002] min to 0.65 [.026] max for 12mm tape.

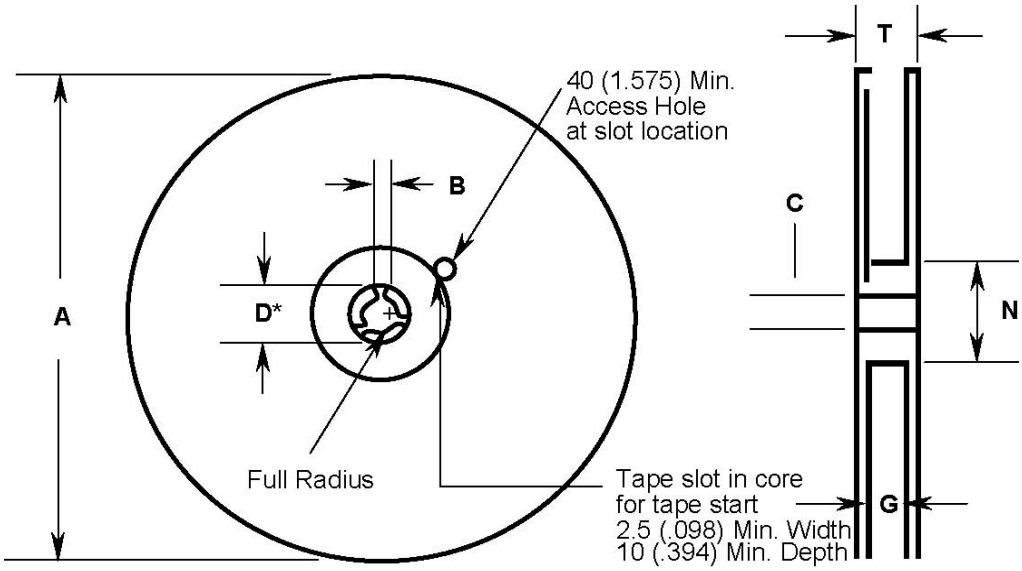

REEL DIMENSIONS							
Tape Size	A Max.	B Min.	C	D* Min.	N Min.	G	T Max.
8mm	330 (12.992)	1.5 (.059)	13.0±0.20 (.152±.008)	20.2 (.795)	50 (1.973)	8.4±1.5 0.0 (.331±.059) 0.0	14.4 (.567)
12mm	330 (12.992)	1.5 (.059)	13.0±0.20 (.152±.008)	20.2 (.795)	50 (1.973)	12.4±2.0 0.0 (.488±.078) 0.0	14.4 (.567)

MECHANICAL POLARIZATION

SOIC-8L DEVICE

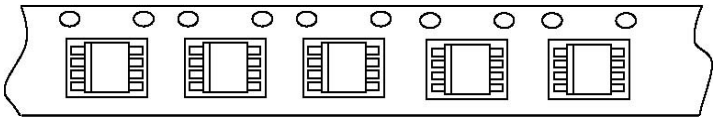

User direction of feed - →

SOT-89 DEVICE

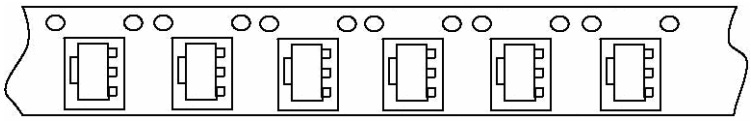

User direction of feed - →

SOT-23 3L DEVICE

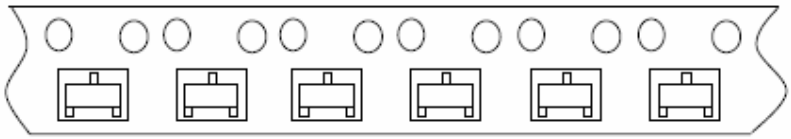

User direction of feed - →